FW155LS_r1.2.indd 1 4/13/10 3:14 PM

MATRIX™

Strong. Smart. Beautiful.

LIVESTRONG® BY MATRIX

FREE WEIGHT
G1FW155LS PREACHER CURL BENCH

MATRIX FITNESS | 1600 LANDMARK DRIVE COTTAGE GROVE WI 53527 USA
Toll Free 866.693.4863 matrixfitness.com Fax 608.839.8687

PART # 0000000000

REV. 1.2

IMPORTANT SAFETY INFORMATION

It is the sole responsibility of the purchaser of MATRIX Fitness Systems products to instruct all individuals, whether they are the end user or supervising personnel on proper usage of the equipment.

It is recommended that all users of MATRIX Fitness Systems exercise equipment be informed of the following information prior to its use.

PROPER USAGE

Do not use any equipment in any way other than designed or intended by the manufacturer. It is imperative that MATRIX Fitness Systems equipment be used properly to avoid injury.

Keep hands and feet clear at all times from moving parts to avoid injury.

CHECK FOR DAMAGED PARTS

1. DO NOT use any equipment that is damaged and or has worn or broken parts. Use only replacement parts supplied by your country's local MATRIX Fitness Systems dealer.
2. MAINTAIN LABELS AND NAMEPLATES: Do not remove labels for any reason. They contain important information. If unreadable or missing, contact your MATRIX Fitness Systems dealer for a replacement.
3. SECURING EQUIPMENT: All equipment MUST be secured to the floor to stabilize and eliminate rocking or tipping over. This must be performed by a licensed contractor.
4. MAINTAIN ALL EQUIPMENT: Preventative maintenance is the key to smooth operating equipment, as well as keeping users liability to a minimum. Equipment needs to be inspected at regular intervals. Defective components must be replaced immediatly. Improperly working equipment must be kept out of use until it is repaired. Ensure that any person(s) making adjustments or performing maintenance or repair of any kind is qualified to do so. Matrix Fitness will provide service and maintenance training at our corporate facility upon request or in the field if proper arrangements are made.
5. Ensure that any person(s) making adjustments or performing maintenance or repair of any kind is qualified to do so. MATRIX Fitness Systems dealers will provide service and maintenance training at our corporate facility upon request.

WARNING: SERIOUS INJURY CAN OCCUR ON THIS EQUIPMENT. FOLLOW THESE PRECAUTIONS TO AVOID INJURY!

1. Never allow children on freeweight equipment. Teenagers must be supervised at all times while using this equipment.
2. All warnings and instructions should be read and proper instruction obtained prior to use.
3. Cease exercise if you feel faint or dizzy. Obtain a medical exam before beginning an exercise program.
4. Keep body, hair, clothing and fitness accessories free and clear of all moving parts.
5. Inspect the machine before use. DO NOT use machine if it appears damaged or inoperable.
6. This equipment should only be used in supervised areas where access and control are regulated by the owner.

PRODUCT SPECIFICATIONS

TECH SPECS	
Overall dimensions (L x W x H)	120 x 72 x 95 cm / 47" x 28" x 37"
Product Weight	37 kg / 81 lbs

G1FW155LS PREACHER CURL

UNPACKING G1FW155LS Preacher Curl
Thank you for purchasing a LIVE**STRONG** by Matrix product. This machine is an EN957-1 and EN957-4 complaint Class S product. Your Matrix G1FW155LS Preacher Curl is inspected before it is packaged. It is shipped in multiple pieces to facilitate the compact packaging of the machine. Prior to assembly, confirm all the components by matching them with the exploded diagrams. Carefully unpack the unit from this box and dispose of the packing materials in accordance with your local laws.

CAUTION

The weight of the G1FW155LS Preacher Curl is 81 lbs. (37 kg). To avoid injury to yourself and prevent damage to the frame components, be sure to have proper assistance removing the frame pieces from this box. Please be sure to install the equipment on a stable base, properly level the machine and leave at least two feet of clearance to enter and exit the machine. Maximum user weight for this machine is 350 lbs. (159 kg). Maximum weight load of each support is 500 lbs. (227kg).

TOOLS REQUIRED FOR ASSEMBLY

13mm and 17mm Wrench
M8 L-Shape Allen Wrench
M6 L-Shape Allen Wrench

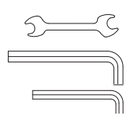

If any items are missing please contact your country's local MATRIX dealer for assistance.

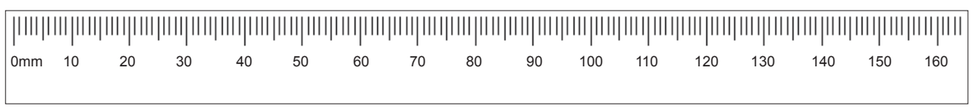

Step 1

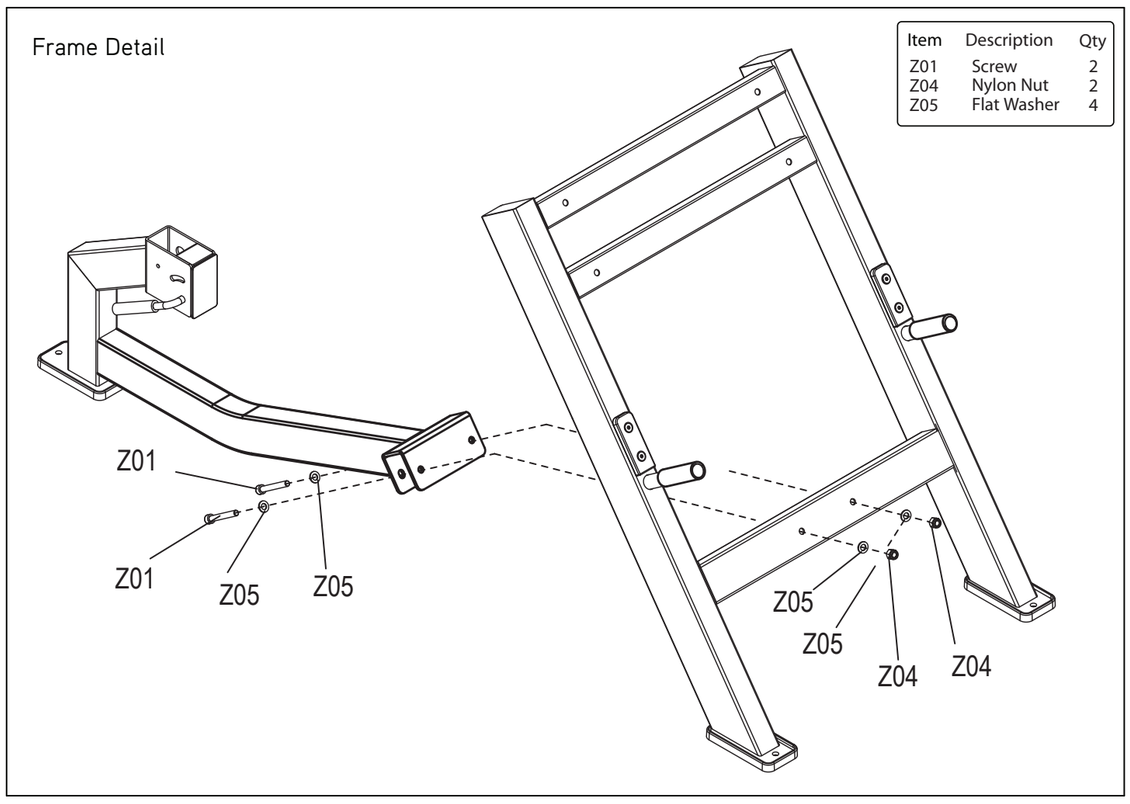
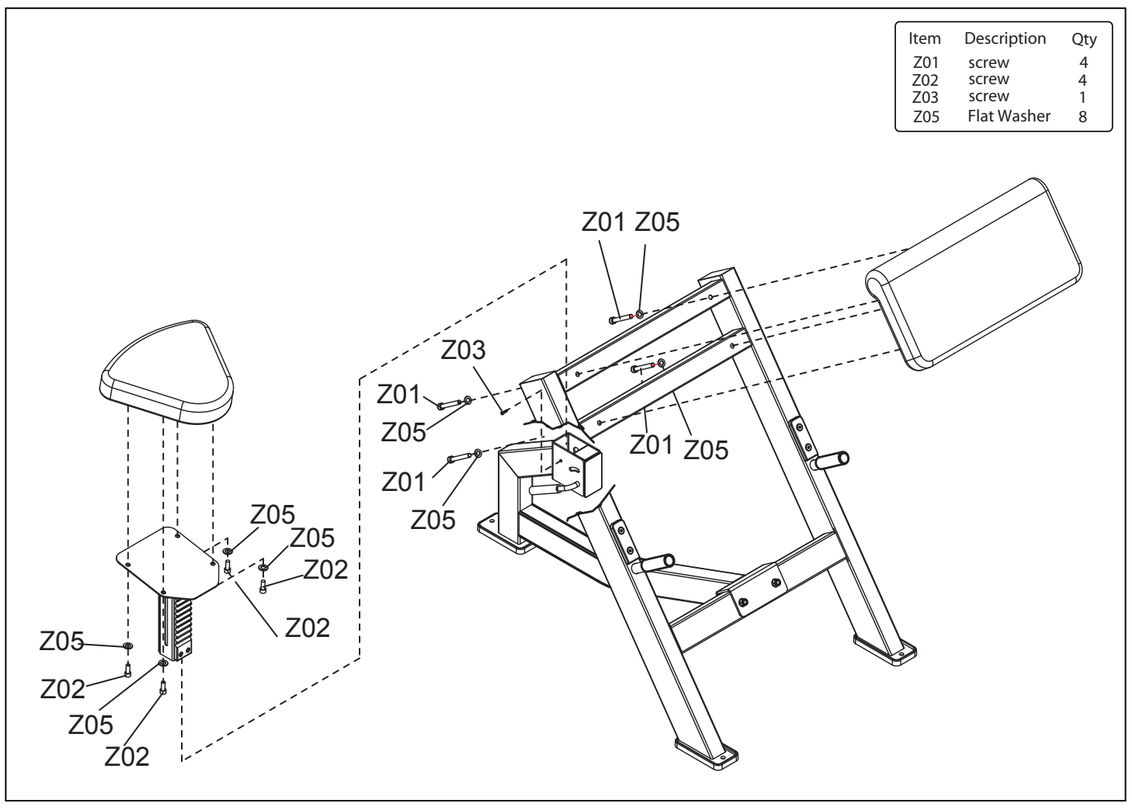
Step 2