MATRIX
Strong • Smart • Beautiful

# OWNERS MANUAL

AURA Benches and Racks

**G3-FW13 Olympic Flat Bench**

# IMPORTANT SAFETY INSTRUCTIONS

## IMPORTANT SAFETY INFORMATION

It is the sole responsibility of the purchaser of Matrix products to instruct all individuals, whether they are the end user or supervising personnel on proper usage of the equipment.

It is recommended that all users of Matrix exercise equipment be informed of the following information prior to its use.

## PROPER USAGE

Do not use any equipment in any way other than designed or intended by the manufacturer. It is imperative that Matrix equipment be used properly to avoid injury.

Keep hands and feet clear at all times from moving parts to avoid injury.

## CHECK FOR DAMAGED PARTS

- DO NOT use any equipment that is damaged and or has worn or broken parts. Use only replacement parts supplied by your country's local Matrix dealer.
- MAINTAIN LABELS AND NAMEPLATES: Do not remove labels for any reason. They contain important information. If unreadable or missing, contact your Matrix dealer for a replacement.
- SECURING EQUIPMENT: All equipment MUST be secured to the floor to stabilize and eliminate rocking or tipping over. This must be performed by a licensed contractor.
- MAINTAIN ALL EQUIPMENT: Preventative maintenance is the key to smooth operating equipment as well as keeping your liability to a minimum. Equipment needs to be inspected at regular intervals.
- Ensure that any person(s) making adjustments or performing maintenance or repair of any kind is qualified to do so. Matrix dealers will provide service and maintenance training at our corporate facility upon request.

## **WARNING**: SERIOUS INJURY CAN OCCUR ON THIS EQUIPMENT. FOLLOW THESE PRECAUTIONS TO AVOID INJURY!

- Never allow children on strength training equipment. Teenagers must be supervised at all times while using this equipment.
- All warnings and instructions should be read and proper instruction obtained prior to use.
- Use this equipment for its intended purpose ONLY.
- NEVER allow resistance straps, ropes or other means to be attached to this equipment, as this may result in serious injury.
- NEVER use this equipment for support during stretching, as this may result in serious injury.
- Cease exercise if you feel faint or dizzy. Obtain a medical exam before beginning an exercise program.
- Keep body, hair, clothing, and fitness accessories free and clear of all moving parts.
- Inspect the machine before use. DO NOT use machine if it appears damaged or inoperable.
- Check to see that the selector pin is completely inserted into the weight stack.
- NEVER use the machine with the weight stack pinned in an elevated position.
- NEVER use dumbbells or other means to incrementally increase the weight resistance. Only use the means provided directly from the manufacturer.
- This equipment should only be used in supervised areas where access and control are regulated by the owner.

**WARNING:** This product contains chemicals known to the State of California to cause cancer and birth defects or other reproductive harm.



# GETTING STARTED



## PRODUCT SPECIFICATIONS

| TECH SPECS | |
|---|---|
| Overall dimensions | 70"L x 66"W x 50"H (177.8cm x 167.6cm x 127cm) |
| Weight | 245 lbs (111 kg) |
| Shipping weight | |

| WARRANTY (Valid in USA only) | |
|---|---|
| Frame (not coatings) | 10 years |
| Structural parts | 10 years |
| Weight stacks | 5 years |
| Pulleys | 5 years |
| Pivot bearings | 5 years |
| Any items not specified | 3 years |
| Labor (excluding upholstery/cables/grips) | 3 years |
| Upholstery/cables/grips/springs | 1 year |
| Accessories | 6 months |

## MAINTENANCE CHECKLIST

| ACTION | FREQUENCY |
|---|---|
| Clean Upholstery | Daily |
| Inspect Cables | Daily |
| Clean Guide Rods | Monthly |
| Inspect Hardware | Monthly |
| Inspect Frame | Bi-Annually |
| Clean Machine | As Needed |
| Clean Grips | As Needed |
| Lubricate Guide Rods | As Needed |

Upholstery & Grips should be cleaned with a non-ammonia based cleaner (like Simple Green) or a mild soap and water. Guide rods should be lubricated with Teflon based lubricant. Apply the lubricant to a cotton cloth and then apply up and down the guide rods.



MX_13_MANUAL_AURA_G3FW13_r1.7.indd 2-3 4/18/13 1:42 PM

## UNPACKING

Thank you for purchasing a Matrix product. This machine is an EN957-1 and E957-4 complaint Class S product. Your Matrix product is inspected before it is packaged. It is shipped in multiple pieces to facilitate the compact packaging of the machine. Prior to assembly, confirm all the components by matching them with the exploded diagrams. The weight stack is shipped in separate packaging to reduce the weight of this box. Carefully unpack the unit from this box and dispose of the packing materials in accordance with your local laws.

## CAUTION

The weight of the product is 245 lbs. (111 kg). The weight stack tower is packaged completely assembled for ease of installation; use extra caution when removing from its pallet during assembly. To avoid injury to yourself and prevent damage to the frame components, be sure to have proper assistance removing the frame pieces from this box. Please be sure to install the equipment on a stable base, properly level the machine and leave at least two feet of clearance to enter and exit the machine. Maximum user weight for this machine is 300 lbs.

## INCLUDED TOOLS REQUIRED FOR ASSEMBLY

3MM L-Shaped Allen Wrenchv
4MM L-Shaped Allen Wrench
5MM L-Shaped Allen Wrench
6MM L-Shaped Allen Wrench
8MM L-Shaped Allen Wrench
10MM L-Shaped Allen Wrench
Phillips Screwdriver
8MM Open-End Wrench
17MM Open-End Wrench

If any items are missing please contact your country's local Matrix dealer for assistance.

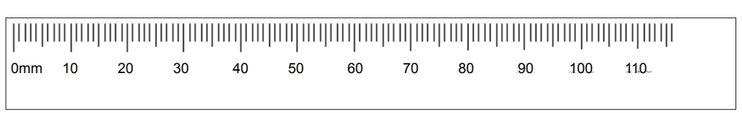






## STEP 1 | INSTRUCTIONS

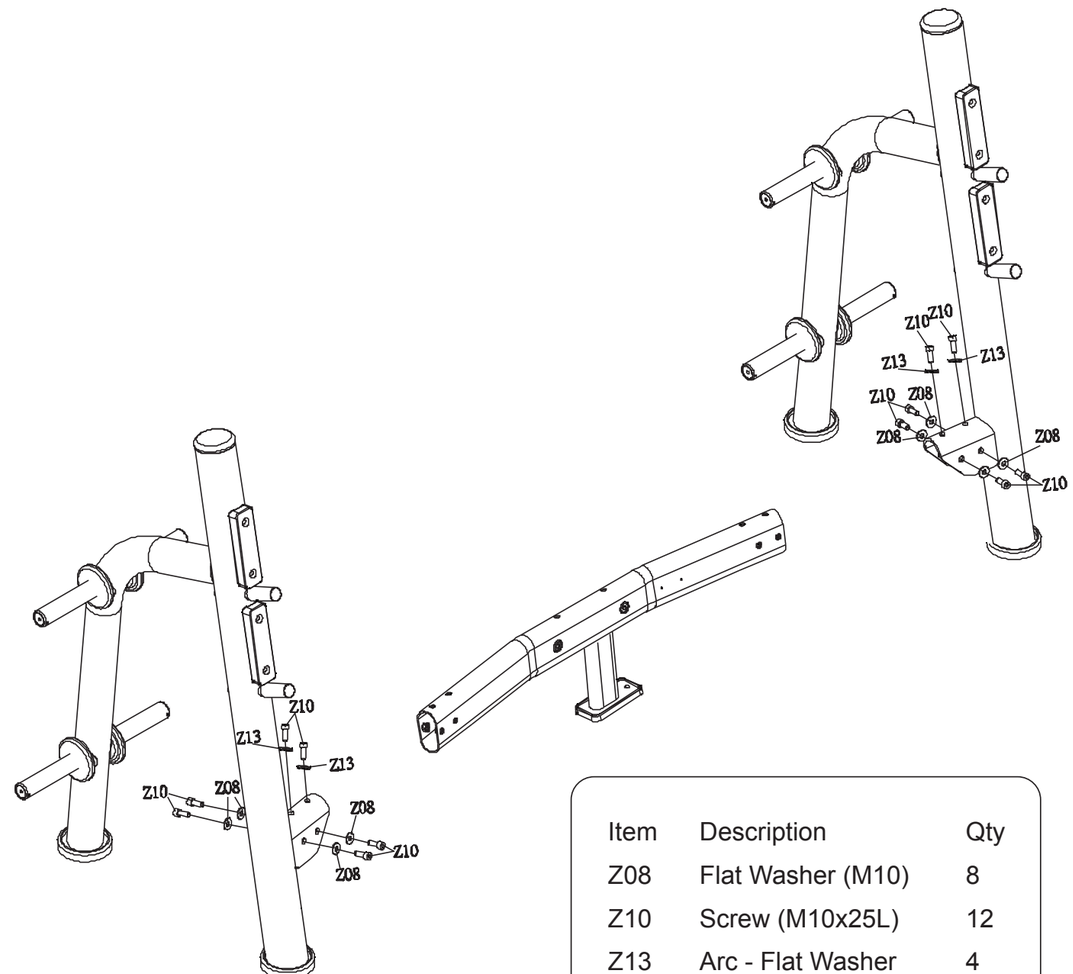


| Item | Description | Qty |
|---|---|---|
| Z08 | Flat Washer (M10) | 8 |
| Z10 | Screw (M10x25L) | 12 |
| Z13 | Arc - Flat Washer | 4 |



MX_13_MANUAL_AURA_G3FW13_r1.7.indd 4-5

4/18/13 1:42 PM

## STEP 2 | INSTRUCTIONS

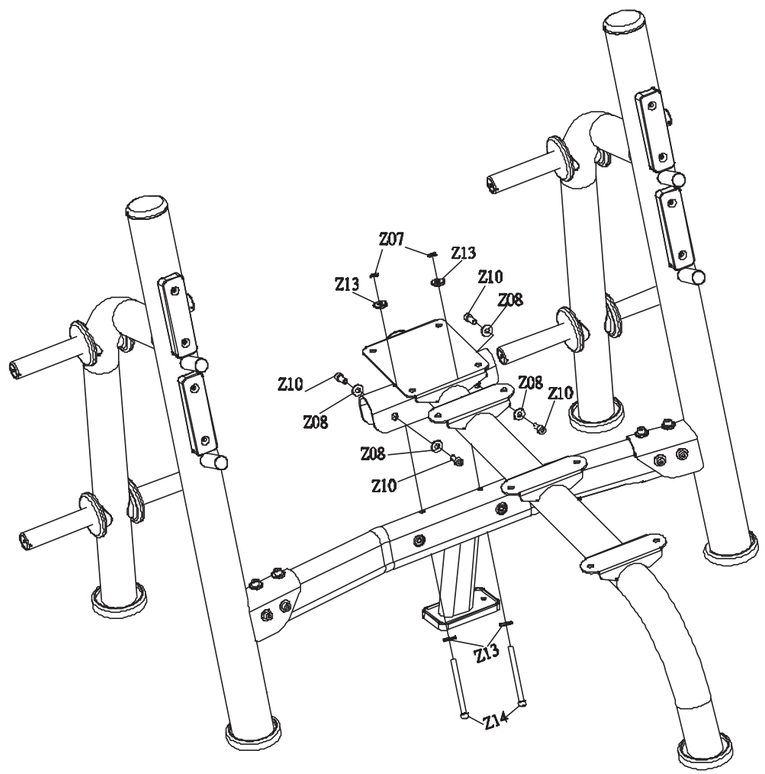


| Item | Description | Qty |
|---|---|---|
| Z07 | Nylon Nut (M10) | 2 |
| Z08 | Flat Washer (M10) | 4 |
| Z10 | Screw (M10x25L) | 4 |
| Z13 | Arc - Flat Washer | 4 |
| Z14 | Screw (M10x120L) | 2 |





## STEP 3 | INSTRUCTIONS

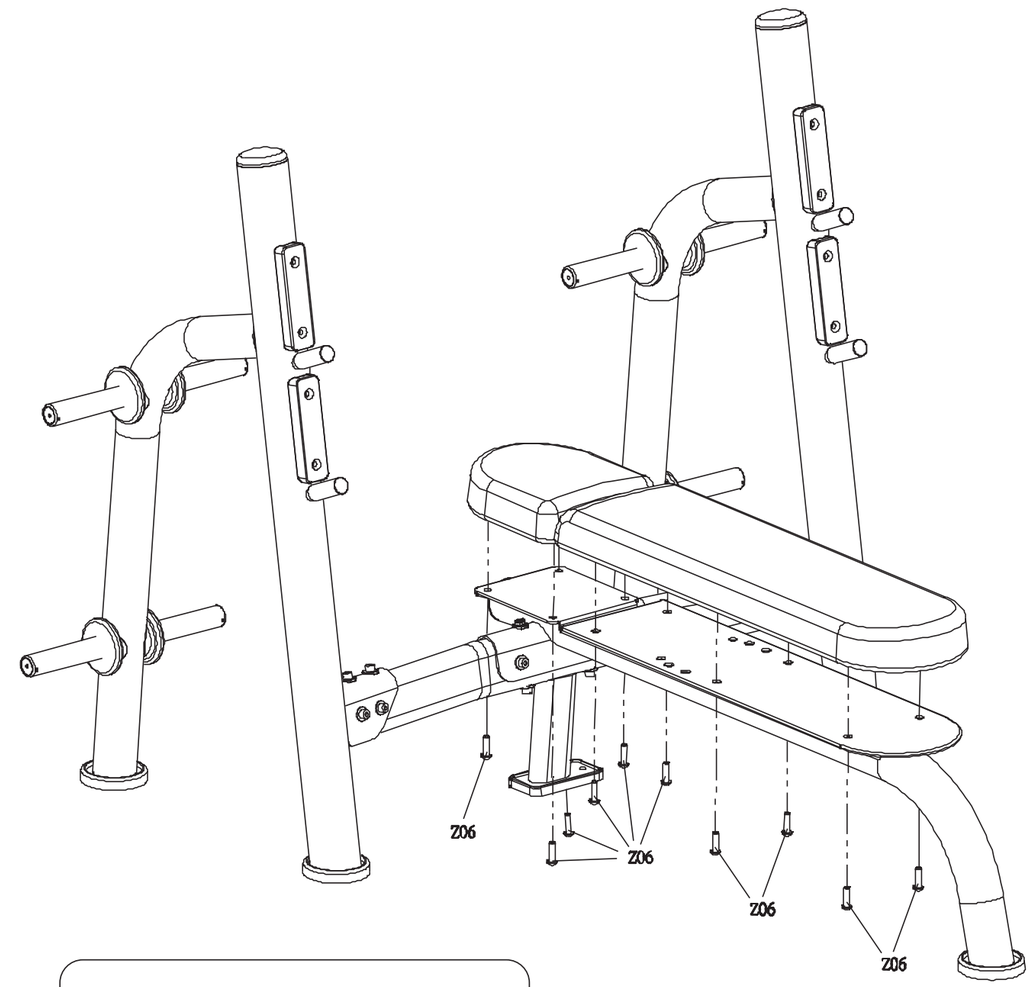


| Item | Description | Qty |
|---|---|---|
| Z06 | Screw (M10x35L) | 10 |

ASSEMBLY COMPLETE!



MX_13_MANUAL_AURA_G3FW13_r1.7.indd 6-7
4/18/13 1:42 PM

MATRIX
Strong • Smart • Beautiful

**Matrix Fitness**
1600 Landmark Drive
Cottage Grove WI 53527

**matrixfitness.com**
Toll-free 866.693.4863
Fax 608.839.8687

© 2013 Matrix Fitness



MX_13_MANUAL_AURA_G3FW13_r1.7.indd 8 4/18/13 1:42 PM