Matrix Fitness Systems Corp. 1610 Landmark Drive Cottage Grove WI 53527
Toll Free 866.693.4863 www.matrixfitness.com Fax 608.839.8687

Strong. Smart. Beautiful.

Assembly Guidelines
AURA G3FW40 PREACHER CURL

PART # MH0204509B

Strong. Smart. Beautiful.

Assembly Guidelines
AURA G3FW40 PREACHER CURL

G3FW40 - PREACHER CURL

UNPACKING G3FW40 PREACHER CURL

Thank you for purchasing a MATRIX Fitness product.Your MATRIX G3FW40 Preacher Curl is inspected before it is packaged. Carefully unpack the unit from this box and dispose of the packing materials in accordance with your local laws.

CAUTION

The weight of the G3FW40 Preacher Curl is 84bs. (38kg). To avoid injury to yourself and prevent damage to the frame components, be sure to have proper assistance removing the frame pieces from this box.

TOOLS NEEDED DESCRIPTION	SKETCH	QUANTITY
5MM L-Shaped Allen Wrench		1
6MM L-Shaped Allen Wrench		1
8MM L-Shaped Allen Wrench		1
10M L-Shaped Allen Wrench		1
Hardware Bag		

If any items are missing please contact your country's local Matrix dealer for assistance.

Step 1

Frame Detail

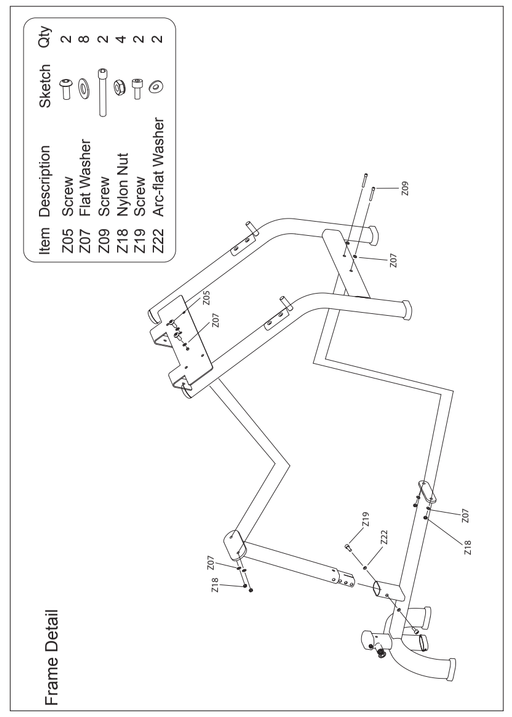

Item	Description	Sketch	Qty
Z05	Screw		2
Z07	Flat Washer		8
Z09	Screw		2
Z18	Nylon Nut		4
Z19	Screw		2
Z22	Ac-flat Washer		2

Step 2

Upholstry Detail

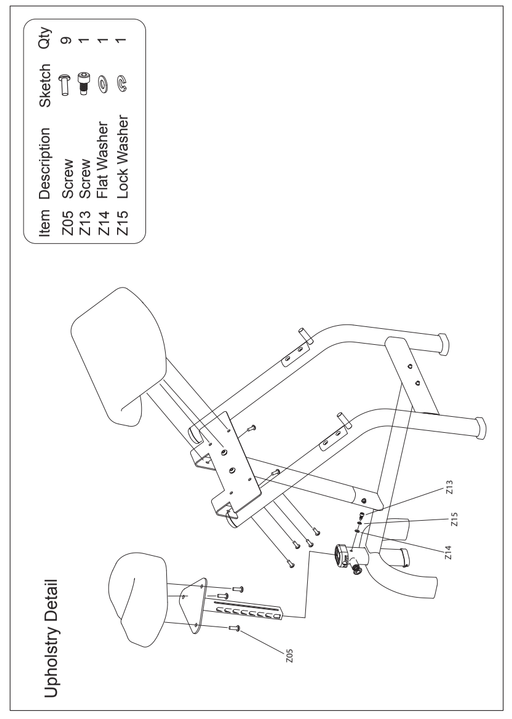

Item	Description	Sketch	Qty
Z05	Screw		9
Z13	Screw		1
Z14	Flat Washer		1
Z15	Lock Washer		1

IMPORTANT SAFETY INFORMATION

It is the sole responsibility of the purchaser of MATRIX Fitness Systems products to instruct all individuals, whether they are the end user or supervising personnel on proper usage of the equipment.

It is the sole recommended that all users of MATRIX Fitness Systems exercise equipment be informed of the following information prior to its use:

PROPER USAGE

1. Do not use any equipment in any way other than designed of intended by the manufacturer. It is imperative the sole recommended that all users of MATRIX Fitness Systems exercise equipment be informed MATRIX Fitness Systems equipment is used properly to avoid injuy,

2. Keep hands and feet clear at all times from moving parts to avoid injury.

CHECK FOR DAMAGE PARTS

1. DO NOT use any equipment that is damaged and or has worn or broken parts. Use only replacement parts supplied by your country's local MATRIX Fitness Systems dealer.

2. MAINTAIN LABELS AND NAMEPLATES: DO NOT remove labels for any reason. They contain important information. If unreadable or missing, contact your MATRIX Fitness Systems dealer for a replacement.

3. SECURING EQUIPMENT: All equipment MUST be secured to the floor to stabilize and eliminate rocking of tipping over. A licensed contractor must be performed this, where application.

4. MAINTAIN ALL EQUIPMENT: Preventative maintenance is the key to smooth operating equipment as well as keeping your liability to a minimum. Equipment needs to be inspected at regular intervals.

5. Ensure that any person(s) making adjustments or performing maintenance or repair of any kind is qualified to do so. MATRIX Fitness System dealers will provide service and manitenance training at our corporate facility upon request.